EXCELL FEEDERS

Operating Manual

Revision 1 · Corda CRD-30S-B Peristaltic Metering Pump

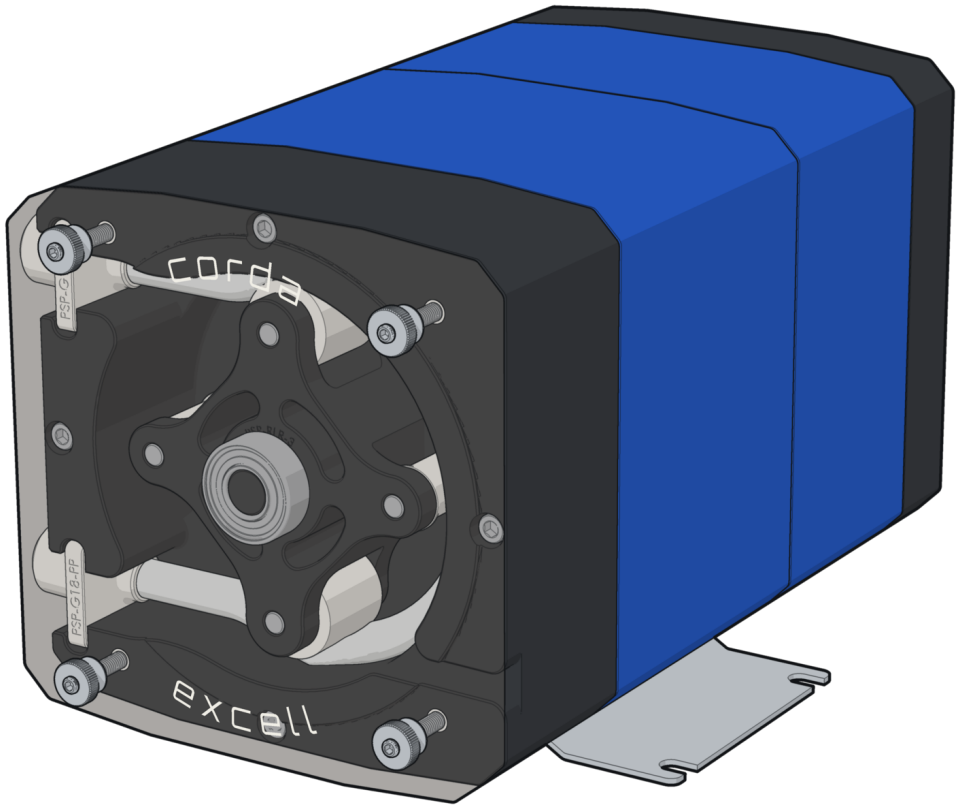

corda30

Corda CRD-30S-B
Peristaltic metering pump for 6PSevo feeders
November 22, 2026

732.828.8655
support@excellfeeders.com

Revision History

Rev	Applies to	Date	Changes
1	Corda CRD-30S-B pumps on 6PSevo feeders, S/N E-1500 and up	November 22, 2026	Initial release. Supersedes the Excell CORDA-030-B Peristaltic Metering Pump Operating and Maintenance Manual (July 14, 2026), also included in the 6PSevo Operating Manual Rev 7.

Related documents

- **6PSevo 400/1200 Operating Manual** (Rev 8, S/N E-1517 and up): feeder installation and operation, pump calibration and the controller settings for the pump.
- **Cortex 7 HMI Manual**: reference for the polymer pump settings, alarms and the HELP screen.

 Copyright © 2026 Excell Feeders, Inc. All Rights Reserved.

Contents

Revision History 2
Related documents 2
1.0 Introduction 4
1.1 Features 4
1.2 Safety 4
2.0 Specifications 5
2.1 Technical data 5
2.2 Materials of construction 6
2.3 Dimensions 7
3.0 Description 8
4.0 Installation 9
4.1 Mounting 9
4.2 Hose connections 9
4.3 Electrical 9
5.0 Operation 10
5.1 Pump alarms 10
5.2 Priming 10
6.0 Maintenance 11
6.1 Maintenance schedule 11
6.2 Removing the tube 12
6.3 Inspecting the roller assembly 13
6.4 Installing the new tube 13
6.5 Spare parts 14
7.0 Troubleshooting 14
8.0 Warranty, Returns and Service 15
8.1 Limited warranty 15
8.2 Returns 15
8.3 Damaged or lost shipments 15
8.4 Service and repairs 15
8.5 Disclaimer 16

 Copyright © 2026 Excell Feeders, Inc. All Rights Reserved.

1.0 Introduction

The Excell **Corda CRD-30S-B** is a peristaltic metering pump for neat polymer service on Excell 6PSevo polymer feeders. It is driven and monitored by the feeder's Cortex 7 controller, which provides start/stop, speed control and fault detection. The pump has no local controls.

The controller identifies the pump as **Corda 30**, on motor connector #2. This manual covers the pump only; feeder installation, operation and pump calibration are covered in the 6PSevo Operating Manual.

1.1 Features

- Self-priming against full discharge pressure.
- Tolerates dry running. The polymer contacts only the tube and its end fittings; there are no check valves or dynamic seals.
- One tube size for the full flow range: 0.001 to 7.925 gph (8,000:1 turndown).
- 60 RPM maximum rotor speed, for extended tube life.
- Tool-free tube replacement.
- Occluding rollers on sealed stainless steel bearings; guide rollers keep the tube centered.
- Acetal, polycarbonate, stainless steel and powder-coated aluminum construction; IP66 enclosure.

1.2 Safety



WARNING

Rotating parts. The controller can start the pump without warning. Turn the feeder's SYSTEM switch OFF and disconnect power before removing the pump head cover.



CAUTION

Chemical hazard. Close the polymer valves and relieve discharge pressure before disconnecting hoses or opening the pump head. Wear the eye and hand protection specified in the polymer's SDS. Spilled polymer is extremely slippery; clean it up immediately.

 Copyright © 2026 Excell Feeders, Inc. All Rights Reserved.

2.0 Specifications

2.1 Technical data

Item	Value
Maximum flow rate	7.925 USGPH (30 L/h, 500 mL/min)
Minimum flow rate	0.001 USGPH (0.063 mL/min)
Maximum operating pressure	4 bar (58 psi)
Motor	Brushless DC servo
Speed adjustment range	8,000:1 (0.0125 to 100 %), set by the Cortex 7 controller
Maximum operating speed	60 RPM
Maximum viscosity	12,000 cP
Maximum suction lift	30 ft water
Ambient temperature range	40 to 104 °F (5 to 40 °C)
Humidity	0 to 95 %, non-condensing
Maximum altitude	6,500 ft (2,000 m)
Power supply	85 to 264 VAC, 47 to 63 Hz, 1.9 A at 115 VAC
Control	From the Cortex 7 controller (manual and analog speed control)
Ingress protection	IP66
Weight	14 lb (6.4 kg)
Standards	CE, RoHS compliant, FDA compliant 21 CFR
Warranty	2 years

 Copyright © 2026 Excell Feeders, Inc. All Rights Reserved.

2.2 Materials of construction

Part	Material
Bearings	Stainless steel, sealed
Rotor (roller holder)	Delrin acetal
Rollers	Nylon, on stainless steel sealed bearings
Pump head body	Delrin acetal
Pump head cover	Polycarbonate (clear)
Enclosure	Powder-coated aluminum, Delrin acetal, ABS, stainless steel
Tube fittings	Polypropylene; PVDF optional
Tube	Versilon C-210A (polyurethane)

Versilon is a registered trademark of Saint-Gobain Performance Plastics Corporation.

 Copyright © 2026 Excell Feeders, Inc. All Rights Reserved.

2.3 Dimensions

Dimensions are in inches [mm]. The mounting surface is the underside of the bracket.

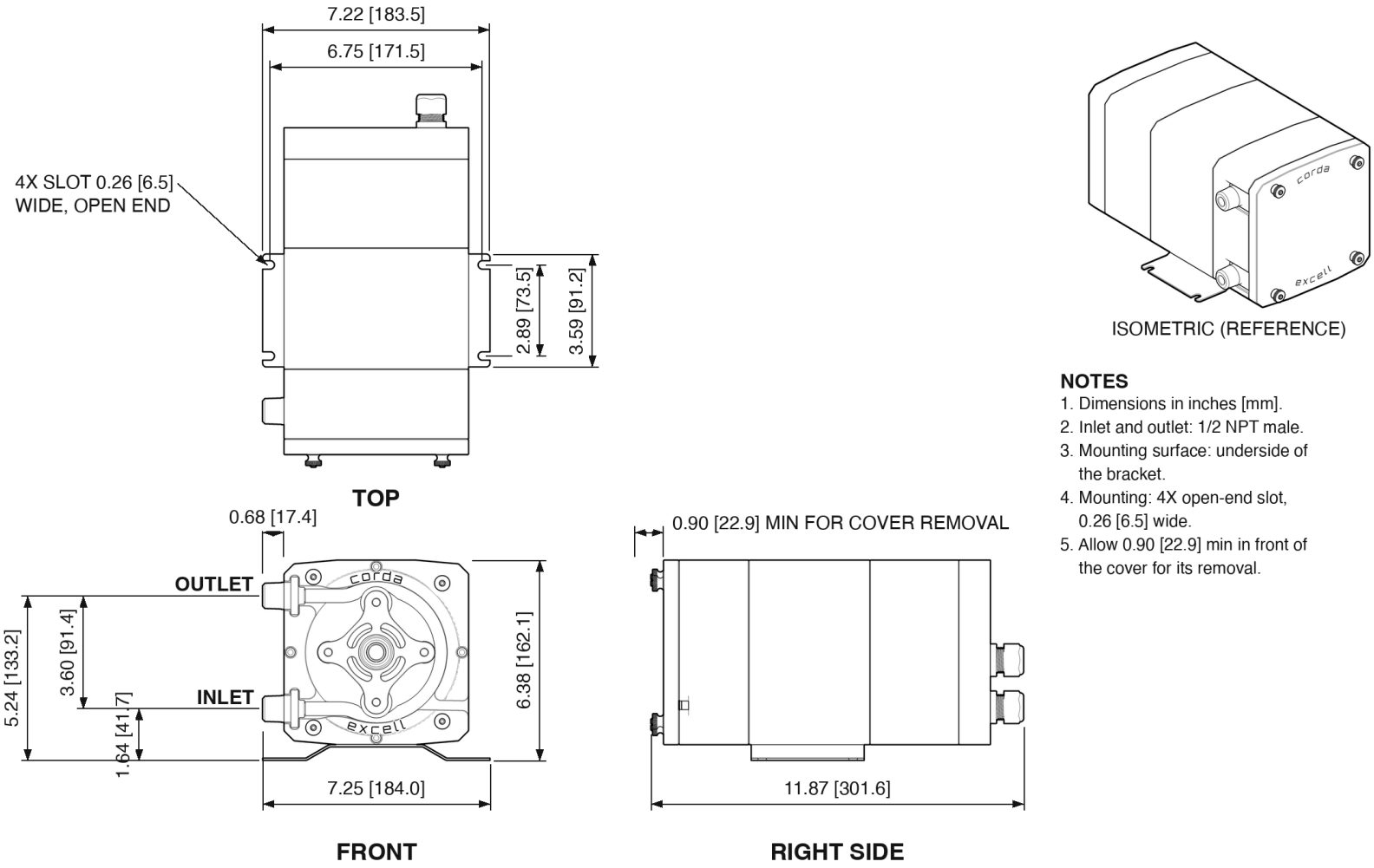

ISOMETRIC (REFERENCE)

NOTES

1. Dimensions in inches [mm].
2. Inlet and outlet: 1/2 NPT male.
3. Mounting surface: underside of the bracket.
4. Mounting: 4X open-end slot, 0.26 [6.5] wide.
5. Allow 0.90 [22.9] min in front of the cover for its removal.

Figure 1 — Corda CRD-30S-B dimensions, inches [mm]

 Copyright © 2026 Excell Feeders, Inc. All Rights Reserved.

3.0 Description

The pump consists of a drive section and a pump head. The drive section is a sealed enclosure that houses the brushless servo gearmotor and its power supply. The pump head, on the front of the drive section, carries the rotor and the pump tube behind a clear polycarbonate cover, which allows the tube and rollers to be inspected with the pump running.

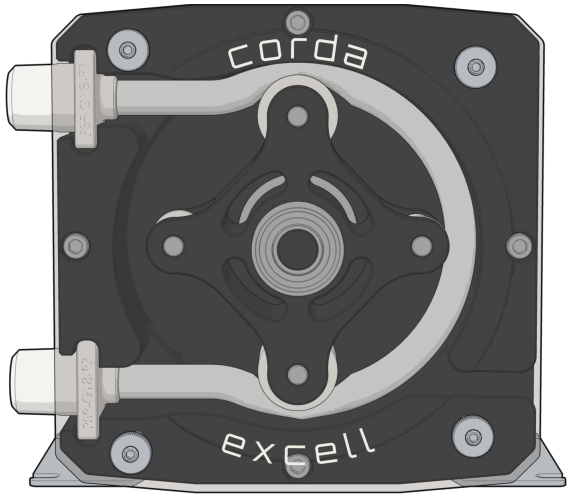

Figure 2 — Pump head, front view, cover installed

Component	Description
Cover	Clear polycarbonate, retained by four thumb nuts on studs. Carries the outboard bearing that supports the rotor.
Rotor	Mounted on the gearmotor output shaft. Two occluding rollers compress the tube against the pump head; two guide rollers keep the tube centered.
Tube	Versilon C-210A polyurethane with a polypropylene 1/2 NPT male fitting at each end. The fittings locate in slots in the pump head and exit on its left side.
Inlet (lower fitting)	Suction connection, from the polymer supply.
Outlet (upper fitting)	Discharge connection, to the feeder's mixing chamber.
Mounting bracket	Secures the pump to the feeder frame through four open-end slots.
Cable glands (rear)	Entries for the power cable and for the motor cable to controller motor connector #2.

The rotor turns **counterclockwise** viewed from the front. Each occluding roller closes the tube and advances the polymer ahead of it from the inlet to the outlet, so flow is proportional to rotor speed. With the pump stopped, a roller keeps the tube occluded and prevents flow through the pump in either direction.

 Copyright © 2026 Excell Feeders, Inc. All Rights Reserved.

4.0 Installation

The pump is supplied mounted, piped and wired on the feeder. This section applies when a pump is replaced.

4.1 Mounting

- Mount the pump level on its bracket, with the pump head accessible for inspection and tube replacement.
- Provide at least 0.90 in (23 mm) of clearance in front of the cover for its removal, plus hand access (section 2.3).
- A flooded suction is preferred. The pump is rated for a suction lift of 30 ft of water, but metering accuracy and tube life are best with the pump below the polymer supply.

4.2 Hose connections

- Connect the polymer supply to the **lower** (inlet) fitting and the line to the mixing chamber to the **upper** (outlet) fitting.
- The tube fittings are polypropylene, 1/2 NPT male. Make up the mating fittings hand-tight, then snug. Do not overtighten: plastic threads are easily damaged. Seal the threads with PTFE tape or a sealant compatible with the polymer.
- Support the hoses independently so that the tube fittings carry no load.
- Keep the suction hose short, with as few joints as possible. Air leakage on the suction side causes loss of prime.

4.3 Electrical



WARNING
Disconnect power before working on the pump wiring.

The pump is powered from the feeder (85 to 264 VAC), and its motor cable connects to motor connector #2 on the Cortex 7 controller. Refer to the 6PSevo Operating Manual, section 4.5, and its factory wiring drawings. On the touchscreen, **SETTINGS** → **Outputs** must show **Motor #2: Corda 30 Polymer Pump** (factory setting).

 Copyright © 2026 Excell Feeders, Inc. All Rights Reserved.

5.0 Operation

The Cortex 7 controller starts, stops and sets the speed of the pump according to the feeder's start/stop and speed modes (Local, Auto or Remote); refer to the 6PSevo Operating Manual. The pump settings are:

- **Scaling** (**SETTINGS → Polymer Pump**): Corda 30, 0 to 7.925 gph (factory setting). Change it only to enter a calibration result (6PSevo Operating Manual, Calibrating the metering pump).
- **Corda Stall Detection** (**SETTINGS → Outputs**): On (factory setting). Do not disable.

5.1 Pump alarms

Alarm	Meaning	Check
Corda 30 Shutdown	The pump drive has shut down.	Power to the pump; drive status on the HELP screen.
Corda 30 Stall	The rotor has stalled. The controller retries automatically before raising the alarm.	Closed valve or blockage in the discharge line; plugged injection valve; polymer viscosity above the pump rating; tube not seated.

The **POLYMER PUMP (CORDA 30)** card on the HELP screen reports the drive status and diagnostics. The **MAINTENANCE** card totals the polymer pumped, the run time and the pump revolutions since the counters were last reset.

5.2 Priming

The pump is self-priming. With the polymer valves open, run the pump at a high Local speed until polymer free of air reaches the discharge hose, then restore the operating setpoint. Dry running during priming does not damage the pump.

 Copyright © 2026 Excell Feeders, Inc. All Rights Reserved.

6.0 Maintenance

6.1 Maintenance schedule

Interval	Task
Weekly	With the pump running, inspect the pump head through the cover: no polymer outside the tube, tube centered on the rollers, no cracking or permanent flattening of the tube. Check the fittings and hoses for leaks and the enclosure for corrosion.
When the tube is worn or the delivered flow has dropped	Replace the tube (6.2 to 6.4). Recalibrate the pump and reset the maintenance counters.
At each tube replacement	Inspect the roller assembly and clean the pump head (6.3). Check that the cover bearing rotates freely.

Tube life depends on pump speed, discharge pressure and the polymer. Record the MAINTENANCE counters at each tube replacement to establish the replacement interval for the installation. Stock one spare tube per pump.

 Copyright © 2026 Excell Feeders, Inc. All Rights Reserved.

6.2 Removing the tube

1. Turn the SYSTEM switch OFF and disconnect power to the feeder.
2. Close the polymer valves and relieve the discharge pressure.
3. Disconnect the inlet and outlet hoses from the tube fittings. Contain the polymer that drains.

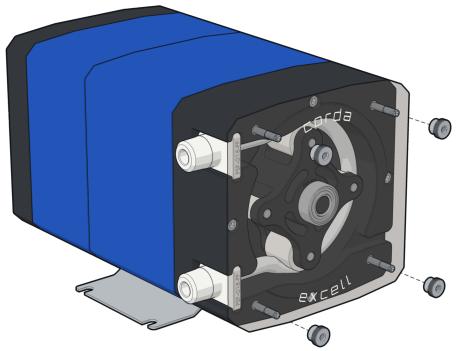

1 Remove the four thumb nuts.

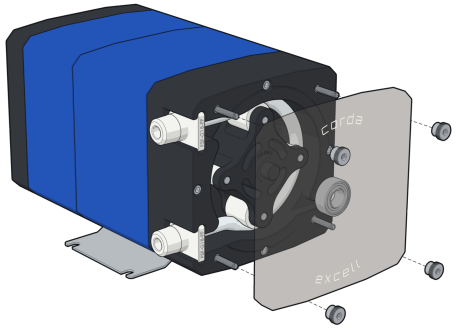

2 Slide the cover off the studs. Check that its bearing rotates freely.

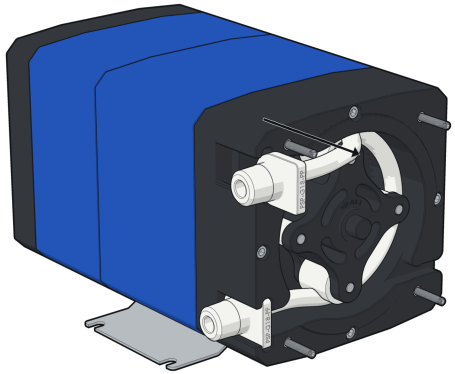

3 Pull the **upper** (outlet) tube fitting out of its slot.

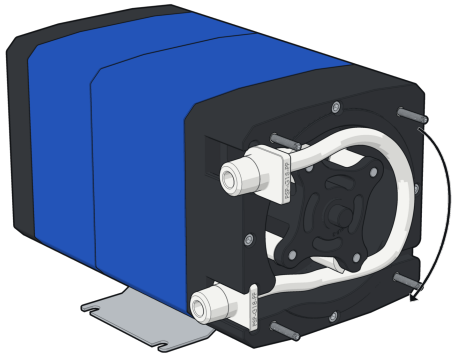

4 Turn the rotor **clockwise** by hand to feed the tube out of the pump head.

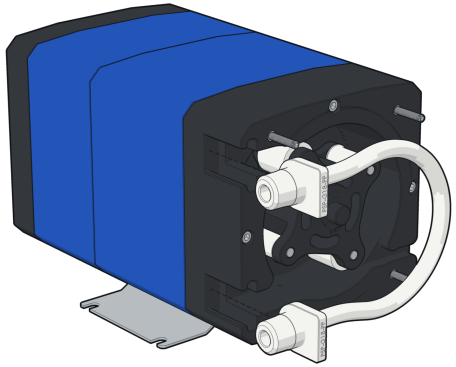

5 Remove the tube together with the lower (inlet) fitting.

 Copyright © 2026 Excell Feeders, Inc. All Rights Reserved.

6.3 Inspecting the roller assembly

Inspect the roller assembly at every tube replacement, before installing the new tube.

1. With the tube removed (6.2), pull the roller assembly straight off the motor shaft.
2. Check that every roller rotates freely. Replace the roller assembly (6.5) if any roller is stiff or worn.
3. Clean the pump head, roller assembly and cover with warm water as required. Do not use solvents: they attack the polycarbonate cover.
4. Refit the roller assembly on the keyed shaft and push it fully home. No angular alignment is required.

6.4 Installing the new tube

Inspect the new tube for damage before installing it. Install it in the same orientation as the tube removed, starting at the lower (inlet) end.

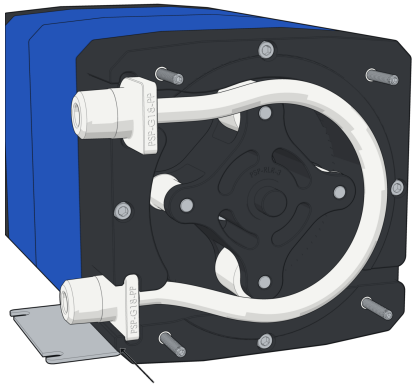

1 Push the **lower** (inlet) tube fitting fully into its slot.

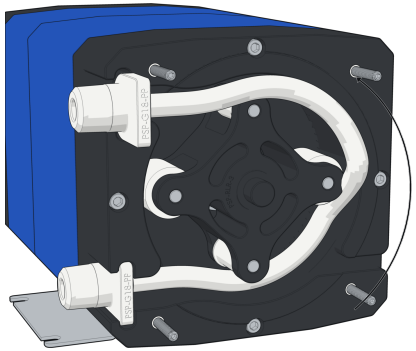

2 Turn the rotor **counterclockwise** by hand to draw the tube around the pump head. Keep the tube centered between the guide rollers.

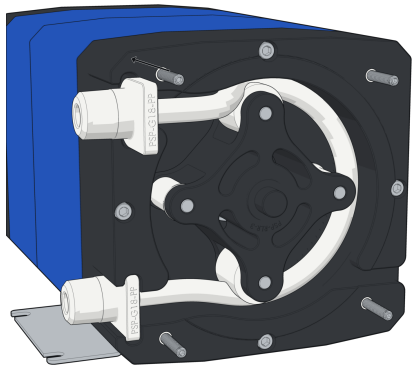

3 Push the **upper** (outlet) tube fitting fully into its slot.

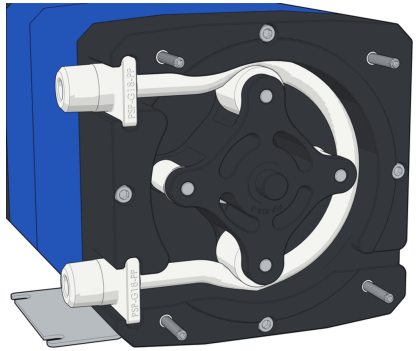

4 Confirm that the tube lies evenly around the rollers, without twist. Refit the cover and tighten the four thumb nuts hand-tight.

1. Reconnect the inlet and outlet hoses and open the polymer valves.
2. Restore power, prime the pump (5.2) and check for leaks.
3. Recalibrate the pump (6PSevo Operating Manual, Calibrating the metering pump).
4. Reset the maintenance counters: **HELP** → **MAINTENANCE** → **Reset**.

 Copyright © 2026 Excell Feeders, Inc. All Rights Reserved.

6.5 Spare parts

Part	Part number	Notes
Pump tube with end fittings	CRD-PSP-1-G18	Versilon C-210A polyurethane, 7/16 in OD × 1/4 in ID; polypropylene 1/2 NPT end fittings. Recommended spare: one per pump.
Pump head cover	CRD-PSP-105-C	Clear polycarbonate.
Thumb nuts, pack of 4	CRD-PSP-95150A	
Roller assembly (rotor)	CRD-PSP-RLR-3	Complete with occluding and guide rollers.

Order spare parts from Excell Feeders (**support@excellfeeders.com**, **732-828-8655**). Quote the feeder serial number.

7.0 Troubleshooting

Symptom	Possible cause	Corrective action
No flow with the rotor turning	Polymer valve closed; polymer supply empty; tube fittings not seated; tube split.	Open the valves; replenish the supply; reseat or replace the tube (6.2 to 6.4).
Loss of prime	Air leak on the suction hose; excessive suction lift; polymer viscosity too high.	Tighten the suction connections and inspect the hose for damage; reduce the suction lift; increase the suction hose size.
Delivered flow below the displayed flow	Worn tube; pump out of calibration.	Replace the tube; recalibrate the pump.
Polymer in the pump head	Tube split.	Replace the tube and clean the pump head (6.3).
Tube fittings work out of their slots	Fitting not fully seated; tube twisted.	Remove and reinstall the tube (6.4).
Corda 30 Stall alarm	Discharge line blocked or valve closed; injection valve plugged; polymer viscosity above the pump rating.	Clear the blockage or open the valve; clean the injection valve; verify the polymer.
Corda 30 Shutdown alarm	Loss of power to the pump; drive fault.	Check the power to the pump. Contact Excell support if the alarm recurs.
Pump does not run, no alarm	Feeder not running, or Local setpoint at 0; Motor #2 not assigned to Corda 30.	Check the feeder modes and setpoint; check **SETTINGS** → **Outputs**.

If the fault persists, contact Excell support with the feeder serial number and the software versions (**HELP** → **VERSIONS**).

 Copyright © 2026 Excell Feeders, Inc. All Rights Reserved.

8.0 Warranty, Returns and Service

8.1 Limited warranty

Excell Feeders (Excell) provides a two-year warranty on all defective parts. Proof of purchase is required.

- The pump tube and the roller assembly are consumable parts and are not covered by this warranty. Pump tube replacements are provided during service unless otherwise specified; the cost of pump tube replacement is the customer's responsibility.
- Excell is not responsible for removal or installation costs.
- Excell pays shipping costs only for warranty products shipped from its factory in Pittston, Pennsylvania.

The warranty is void in case of

- Tampering with major components.
- Chemical damage, improper wiring, weather or water damage, or damage due to power surges.
- Products not used with reasonable care, or not maintained in accordance with these written instructions.

Excell limits its liability solely to the cost of the original product. No other warranties, expressed or implied, are made.

8.2 Returns

- Excell provides a 30-day return policy for factory-direct purchases. Merchandise is not accepted for return after 30 days of purchase, unless otherwise specified.
- To start a return, call Excell at **732.828.8655** for a Return Merchandise Authorization (RMA) number.
- A 15 % restocking fee applies to all returns.
- Include a copy of your invoice or packing slip with the return.

8.3 Damaged or lost shipments

Inspect your order promptly when it arrives, and note any damage on the delivery receipt. For any shortage or damage, contact Excell Customer Service at **732.828.8655** within seven (7) days of receipt.

8.4 Service and repairs

To request a warranty repair:

1. Call Excell at **732.828.8655** for an RMA number.
2. Remove all chemical residue from the pump tube by running water through it. Make sure the pump is clean and dry.
3. Pack the pump carefully. Damage caused by inadequate packaging is the sender's responsibility.
4. Enclose a brief description of the problem.
5. Prepay all shipping costs. COD shipments are not accepted.

 Copyright © 2026 Excell Feeders, Inc. All Rights Reserved.

Excell reserves the right to either replace or repair the pump.

Refurbishing

Excell can refurbish pumps that are no longer covered by the warranty. Labor, replacement parts and shipping are charged to the customer. Pumps received for refurbishing are restored to their original condition. If parts are found missing, the customer is responsible for their replacement cost unless specific instructions are provided.

8.5 Disclaimer

The information in this manual is not intended for specific application purposes. Excell reserves the right to modify prices, products and specifications at any time without prior notice.

Excell Feeders, Inc. · 111 Import Rd., Pittston, PA 18640 · 732.828.8655 · www.excellfeeders.com · sales@excellfeeders.com

 Copyright © 2026 Excell Feeders, Inc. All Rights Reserved.