EXCELL FEEDERS

Data Sheet

Activation Apparatus

Motorless polymer activation

The Excell activation apparatus provides the high energy required to activate all types of liquid polymer, with no motor and no moving drive parts. It is standard on every 6PSevo polymer feeder.

- Patented motorless activation.
- Single-pass activation at a pressure drop of only 10 psi.
- Self-compensating orifice maintains activation energy over the flow range of the feeder.
- Patented self-cleaning sight tube.
- Corrosion-resistant thermoplastic construction.
- Disassembles without special tools for service.

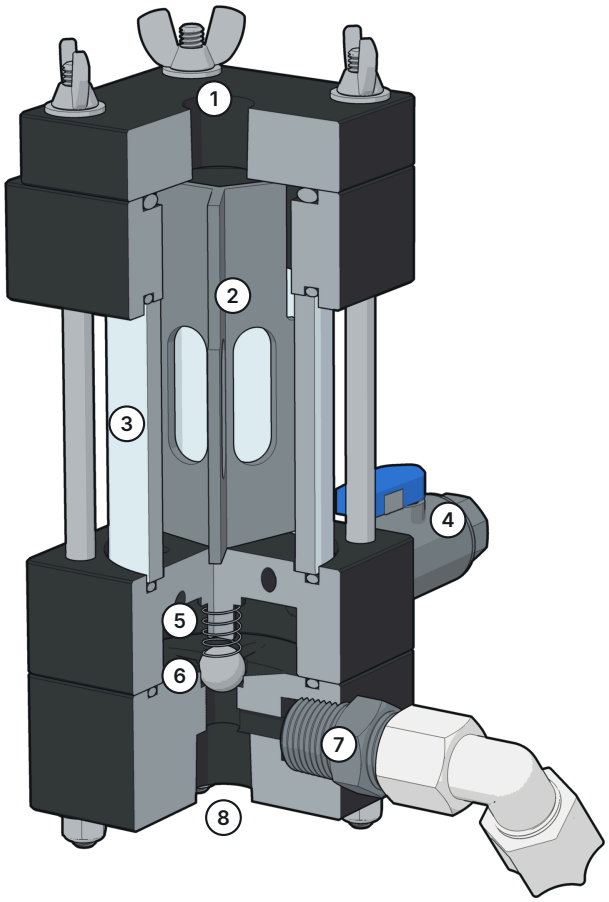

1. Solution outlet
2. Sight tube wiper
3. Sight tube
4. Drain valve
5. Activation spring
6. Activation ball
7. Polymer injection valve
8. Water inlet

PRINCIPLE OF OPERATION

The apparatus injects neat polymer into the dilution water stream and passes the solution immediately through a low-pressure, high-energy activation nozzle. It operates as a low-pressure homogenizer: the polymer is activated as it passes through the annular nozzle orifice.

The pressure drop across the nozzle is 10 psi, which accelerates the solution to a velocity of approximately 40 ft/s. The intense turbulence generated at the orifice activates the polymer. The polymer is exposed to this energy once only, as it passes through the orifice.

FLOW COMPENSATION

The orifice opening is self-compensating for changes in solution flow, so the activation energy remains adequate over the full flow range of the feeder.

SELF-CLEANING SIGHT TUBE

The activated solution flows through a self-cleaning sight tube before it leaves the feeder. The solution flow drives the patented cleaning assembly continuously, and the sight tube gives the operator a direct view of feeder operation.

MATERIALS OF CONSTRUCTION

Apparatus blocks	ABS
Internal components	PTFE and polypropylene
Activation spring	PVDF-coated stainless steel
Tie rods	Stainless steel
O-rings	Buna-N
Injection valve	PVDF body, Viton seat, Hastelloy spring; externally mounted for access

Excell Feeders, Inc.
111 Import Road, Pittston, PA 18640

Specifications may change without notice. © 2026 Excell Feeders, Inc.