EXCELL FEEDERS

Supplement: Extended Leg Kit and Wall Mounting

Revision 1 · Serial Numbers E-1010 and Up

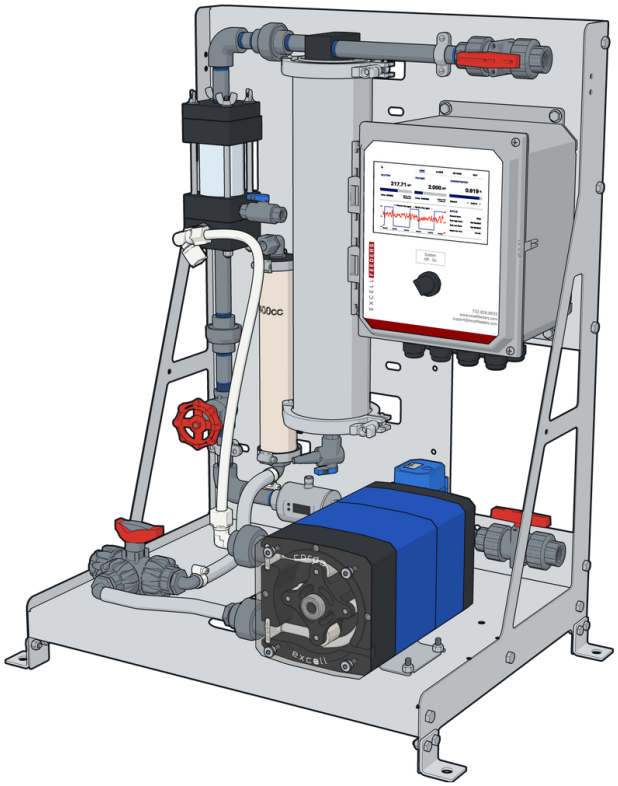

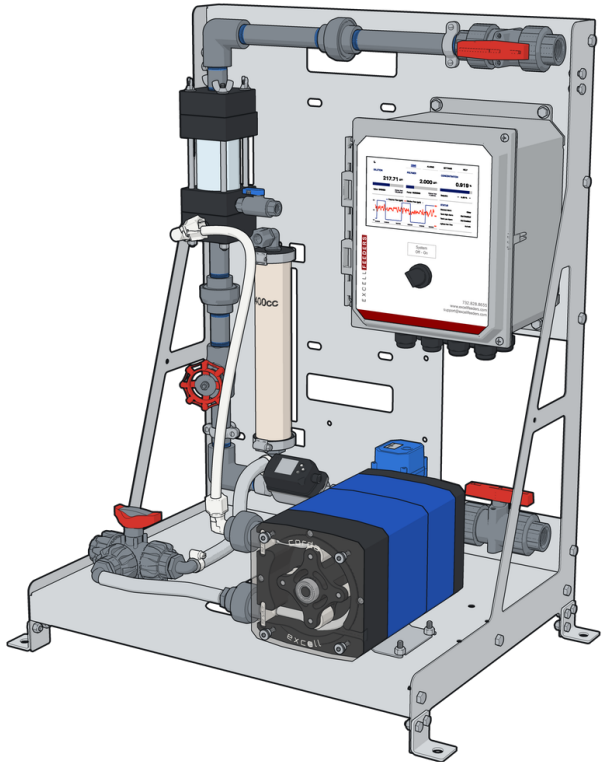

6PSevo

6PSevo 400 / 1200 Polymer Feeder
Extended leg kit (option) and wall brackets
Mounting hardware
November 22, 2026

732.828.8655
support@excellfeeders.com

Revision History

Rev	Serial numbers	Date	Changes
1	E-1010 and up (all feeders)	November 22, 2026	Initial release. Assembly of the extended leg kit (shipped flat) and wall mounting with the top wall brackets supplied with the feeder.

Related documents

- **6PSevo 400/1200 Operating Manual** applicable to the feeder serial number: installation, operation and maintenance of the feeder. This supplement covers mounting only.

 Copyright © 2026 Excell Feeders, Inc. All Rights Reserved.

Contents

Revision History 2
Related documents 2
1.0 Introduction 4
1.1 Safety 4
1.2 Tools and thread compound 4
2.0 Extended Leg Kit 5
2.1 Kit contents 5
2.2 Assembly 6
2.3 Dimensions with the legs 7
3.0 Wall Mounting 8
3.1 Preparing the feeder 9
3.2 Wall anchor holes 9
3.3 Hanging the feeder 9

 Copyright © 2026 Excell Feeders, Inc. All Rights Reserved.

1.0 Introduction

This supplement covers two alternatives to floor mounting for the Excell 6PSevo 400 and 6PSevo 1200 polymer feeders:

- **Extended leg kit (option).** Raises the feeder 16 in (406 mm). Shipped unassembled in a separate carton for assembly on site (section 2.0).
- **Wall mounting.** Uses the two top wall brackets supplied with every feeder and the rear feet of the feeder (section 3.0).

Both apply to all 6PSevo 400 and 6PSevo 1200 feeders. The frame and its hole pattern are common to all serial numbers.

1.1 Safety

Follow the safety instructions in the Operating Manual.



WARNING

The feeder weighs 88 lb (40 kg). Lift it with two people or a hoist. Keep hands clear of the frame while it is lowered onto the legs or positioned against the wall.



CAUTION

Before moving an installed feeder, disconnect power, close the water supply and disconnect the piping.

1.2 Tools and thread compound

Fastener	Wrench or socket
1/4-20 bolts and lock nuts	7/16 in
5/16-18 bolts and lock nuts	1/2 in

NOTE

All fasteners are 18-8 stainless steel. Apply **anti-seize compound** to the bolt threads before fitting the lock nuts. Stainless steel threads gall and seize if assembled dry.

Tighten the lock nuts with hand tools only. Do not use an impact driver.

 Copyright © 2026 Excell Feeders, Inc. All Rights Reserved.

2.0 Extended Leg Kit

2.1 Kit contents

Item	Part	Quantity
Leg side panel	E-FRM-021-0	2
Leg base panel	E-FRM-022-0	1
Bolt, 5/16-18 x 1 in, 18-8 stainless steel		6
Nylon-insert lock nut, 5/16-18, 18-8 stainless steel		6
Bolt, 1/4-20 x 1 in, 18-8 stainless steel		8
Nylon-insert lock nut, 1/4-20, 18-8 stainless steel		8

The four feet of the feeder, with their eight 1/4-20 bolts and lock nuts, are transferred to the legs.

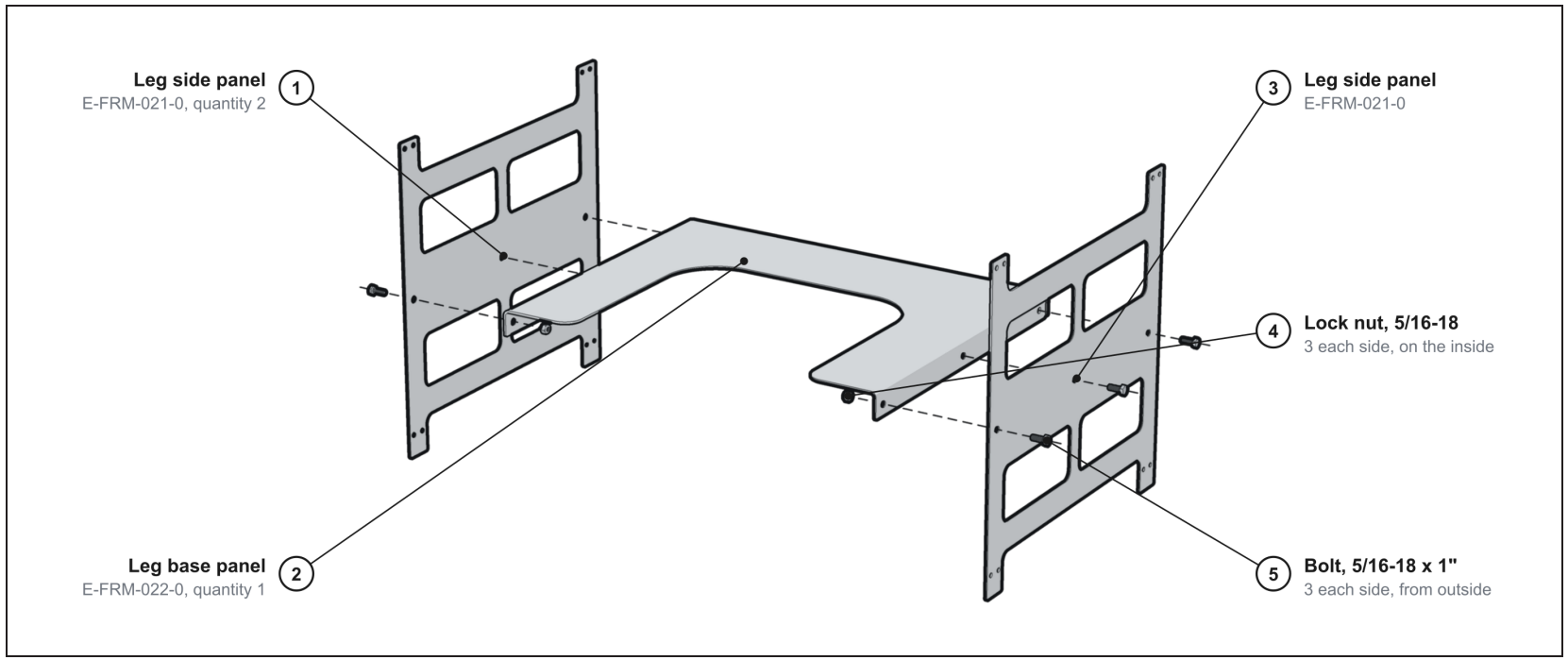

Figure 1 — Extended leg kit: base panel bolted between the two side panels

 Copyright © 2026 Excell Feeders, Inc. All Rights Reserved.

2.2 Assembly

1. Apply anti-seize compound to the threads of each bolt before assembly.
2. Stand the two leg side panels upright and fit the leg base panel between them. Fasten it with the six 5/16-18 bolts and lock nuts, three per side. Do not fully tighten.
3. Remove the four feet from the feeder frame (two 1/4-20 bolts and lock nuts each). Retain the feet and fasteners.
4. Fit the four feet to the bottom of the leg side panels with the retained fasteners, two per foot.
5. Lift the feeder onto the legs. The leg side panels fit outside the frame side panels, with the foot mounting holes in the frame aligned with the holes at the top of the legs.
6. Fasten the frame to the legs through these holes with the eight 1/4-20 x 1 in bolts and lock nuts from the kit, four per side.
7. Tighten all fasteners, starting with the leg base panel.
8. Position the feeder, check that it is level, and anchor it to the floor through the four feet in accordance with the Operating Manual.

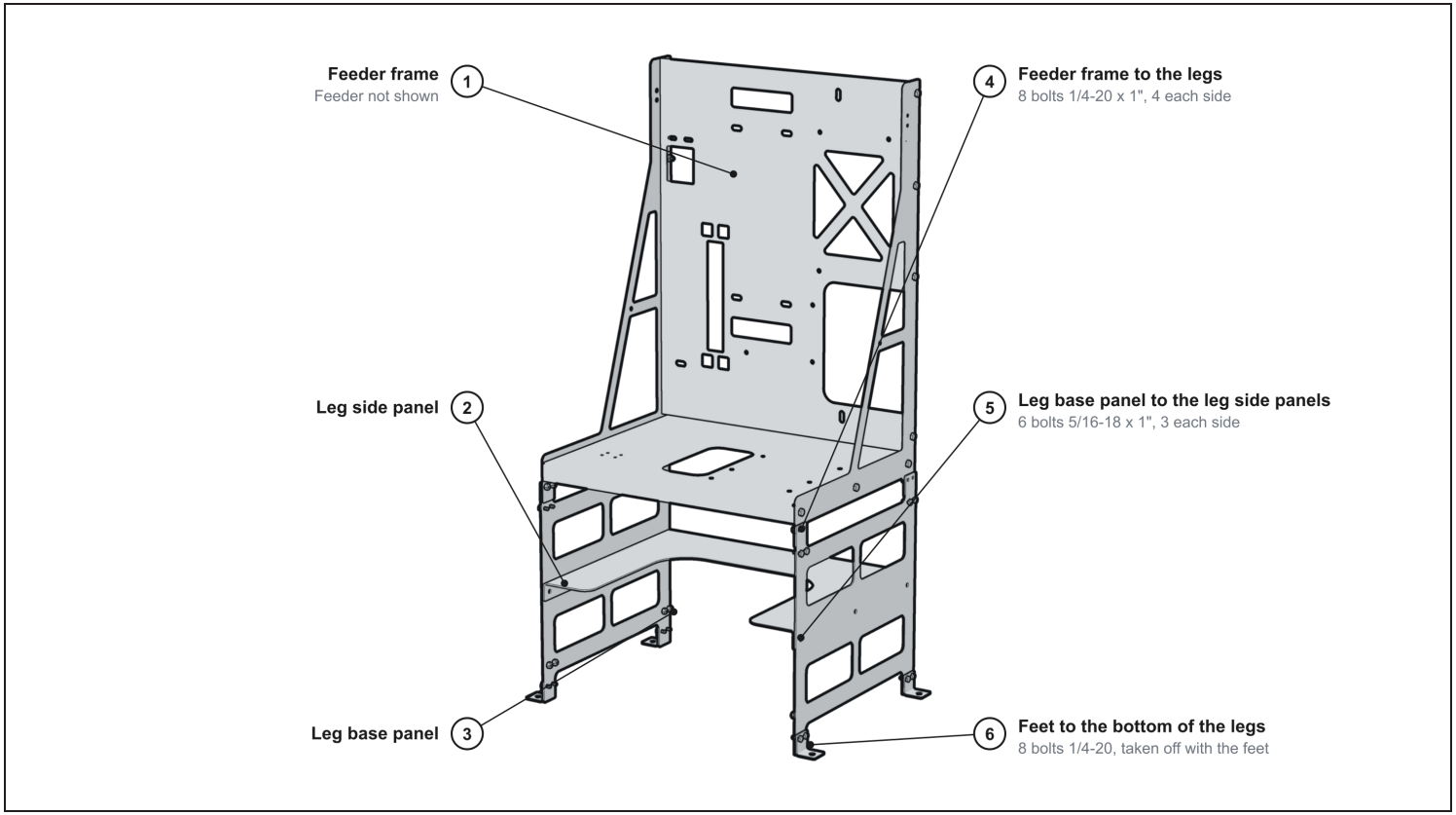

Figure 2 — Feeder frame on the extended legs, with fastener locations

 Copyright © 2026 Excell Feeders, Inc. All Rights Reserved.

2.3 Dimensions with the legs

Dimension	in	mm
Height added by the legs	16.00	406
Height of the feeder frame on the legs	48.00	1219

The footprint and the floor anchor hole pattern are unchanged, because the same feet are used.

 Copyright © 2026 Excell Feeders, Inc. All Rights Reserved.

3.0 Wall Mounting

Two top wall brackets (E-FRM-015-0) are supplied with every feeder. No additional hardware is required to prepare the feeder: the brackets are fastened with the bolts from the front feet, and the rear feet are rotated to serve as the lower wall brackets.

WARNING

The feeder weighs 88 lb (40 kg) empty. The supporting wall or structure and the anchors must be rated for the feeder with its piping full. Wall anchors are not supplied; select anchors suited to the supporting structure (for example strut channel, a steel frame or a concrete wall).

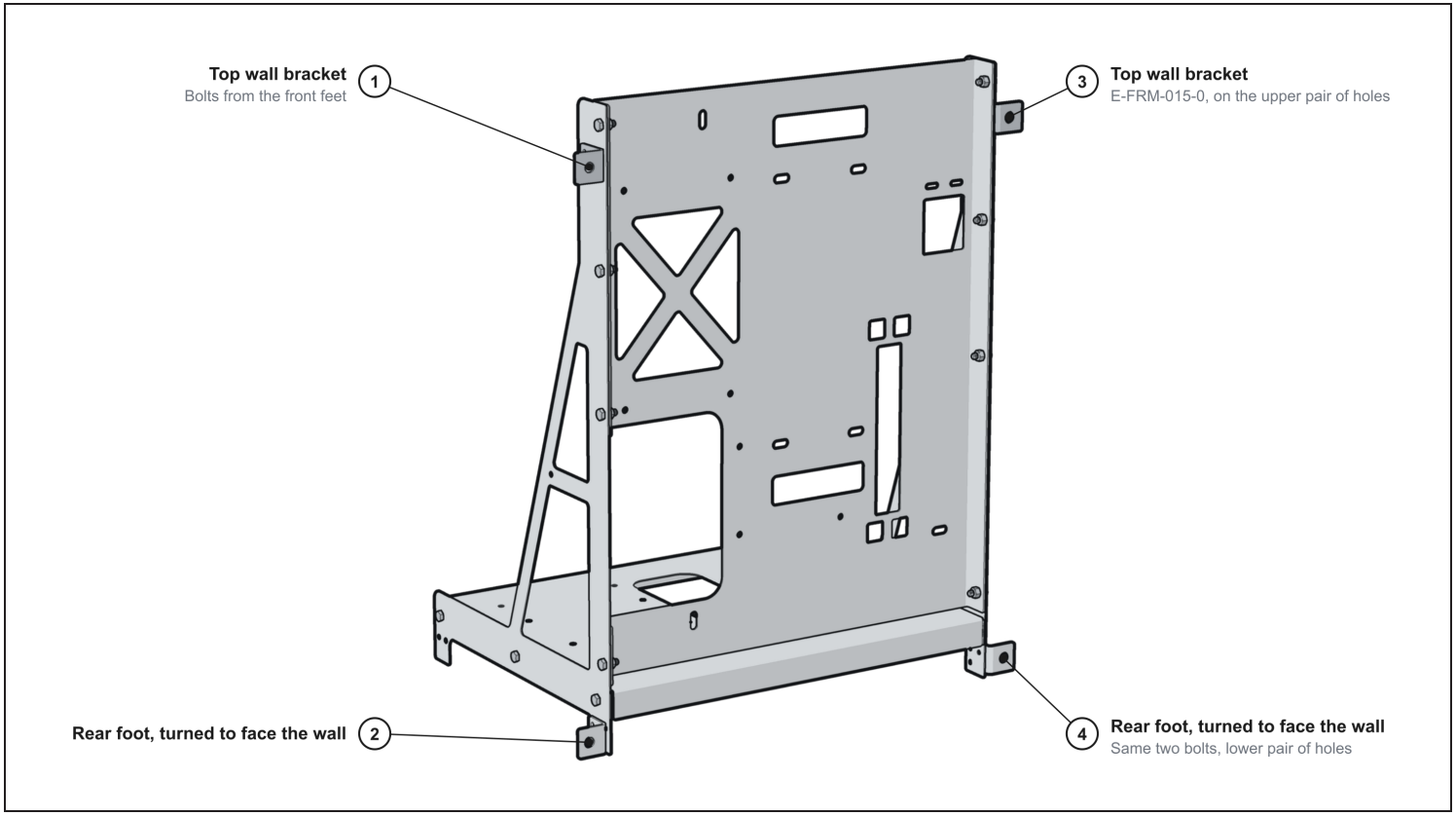

Figure 3 — Feeder frame prepared for wall mounting, rear view

 Copyright © 2026 Excell Feeders, Inc. All Rights Reserved.

3.1 Preparing the feeder

1. Apply anti-seize compound to the bolt threads before refitting each lock nut.
2. Remove the two front feet (two 1/4-20 bolts and lock nuts each). The front feet are not used on a wall-mounted feeder; retain the four bolts and lock nuts.
3. Fit a top wall bracket to the upper rear pair of holes in each side panel, on the outside of the panel, with two of the retained bolts and lock nuts. The flange with the single large hole faces the wall.
4. Remove the two bolts from each rear foot, rotate the foot 90° so that the flange with the large hole faces the wall, and refit it with the same bolts in the lower pair of holes.
5. Check that all four wall flanges lie in one plane, flush with the back of the frame, then tighten the fasteners.

3.2 Wall anchor holes

Dimension	in	mm
Anchor hole diameter, all four	0.50	12.7
Top holes, left to right	24.25	616
Bottom holes, left to right	24.72	628
Top holes to bottom holes	28.29	719

Where practical, mark the anchor positions from the prepared feeder.

3.3 Hanging the feeder

1. Mark out and install the four wall anchors.
2. Lift the feeder into position and fasten it through the two top brackets first, then through the two rear feet.
3. Check that the feeder is level and bears evenly on all four anchors, then tighten the anchors.
4. Connect the piping and wiring in accordance with the Operating Manual.

 Copyright © 2026 Excell Feeders, Inc. All Rights Reserved.